dinamic oil



COMPANY PROFILE

UPDATE

Hoisting Solutions
Power Transmission

dinamicoil.com

COMPANY PROFILE

INDEX

	page
Mission	4
History	6
Application Markets	7
Quality	8
Product Range	10
MOBILE APPLICATIONS	**12**
Rough Terrain Crane	14
Mobile Crane	16
Concrete Pump	18
Telehandler	20
Drilling	22
Tower Crane	24
MARINE APPLICATIONS	**26**
Azimuth Thruster	28
Fishing Crane	30
Service Crane	32
Deck Crane	34
Boat Hoist	36
INDUSTRIAL APPLICATIONS	**38**
Sugar Plant	40
Steel Plant	42
Thickeners	44
Shredders	46
Tunnel Boring Machine	48
Branches	50

The Flexible Thinking Company





SINCE 1970

Mission





Maintaining and improving our “flexible thinking” to offer the best customized solutions on the market and to globalize our company. Improving our quality standards and internal procedures. Becoming a partner of major OEMs. Opening new subsidiaries in main markets that are still not adequately covered.

Company History

1970 Company Foundation. Production of Radial Piston Motors.

1973 Production of Hydraulic Winches.

1990
Acquisition of Oildrive. Planetary gearbox, orbit motor and wheel drive manufacturer, established in 1981.

1992
Acquisition of Oliostip Radial piston motor manufacturer, established in 1970

1996
ISO 9001 Quality certification

2001
Acquisition of gearbox division of GB Ricamb. High torque planetary gearbox manufacturer.

Four decades of **EXPERIENCE**

Dinamic Oil, established in 1970, is an Italian manufacturer of hoisting winches and planetary gearboxes. With 45 years of experience constantly improved by research and development, we have adopted a "**flexible thinking**" approach that allows us to **offer customized solutions** for industrial applications and mobile machines. Dinamic Oil, with headquarters in Modena, has consolidated its position on the international market, where it now has three production units, 8 subsidiaries in **Europe**, the **Americas** and **Asia** and an **extensive network of distributors** around the world. Human relations in business are a major part of what makes a business work. Ease of communication, talented people with expertise, and a friendly approach combined with our "**flexible thinking**" and culture of innovation are the ingredients of our company philosophy and the reason for our success.

MARKETS

- CIVIL ENGINEERING
- DRILLING
- ENERGY
- INDUSTRIAL
- MARINE
- MOBILE
- OIL & GAS
- SUGAR MILL
- MINING

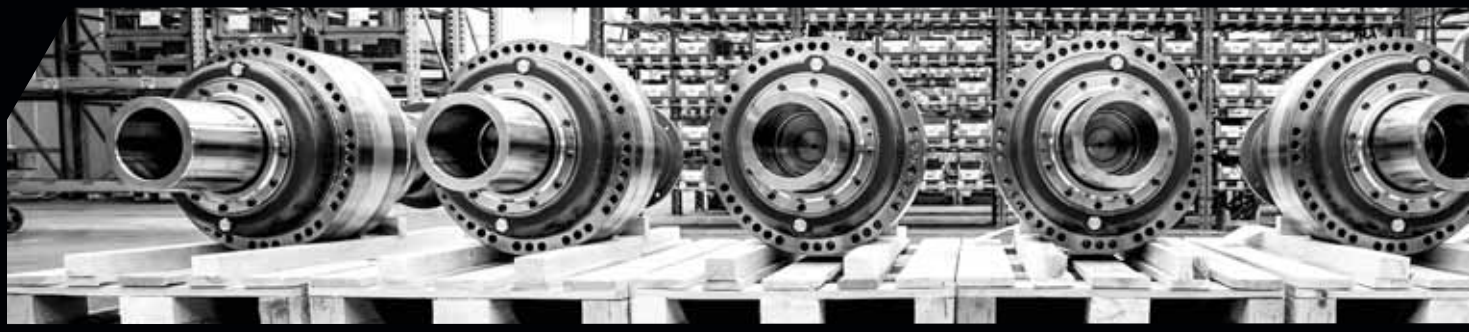

2004 Dinamic Oil China opens in Shanghai.

2005 Dinamic Oil New Plant. Aquisition of new production plant in Bomporto MODENA.

2008 Dinamic Oil India opens in Delhi.

2010 Dinamic Oil North America opens in Charlotte (NC).

2011 Dinamic Oil Asia Pacific opens in Singapore.

2013 Dinamic Oil Norway opens in Oslo.

2021 Dinamic Oil Italia new plant of 2000 mqs. New warehouse for raw materials.

2023 Dinamic Oil India new plant of 12.000 mqs.

Quality





We supply components that must work without fail for decades: therefore, quality is an essential factor for us. Dinamic Oil is UNI EN ISO 9001:2015 certified.

Our Quality Service works closely with major certification organizations to provide, when needed, type approval such as DNV and ABS, design approval and product certificates.

PRODUCT RANGE

Thanks to our “flexible thinking”, Dinamic Oil winches and gearboxes are ideal for driving all industrial systems and self- propelled machines such as crawler cranes, loader cranes, tunnel boring machines (TBM), biogas plants, palm oil crystallizers, conveyors, deck cranes, jack-up systems, tensioners, and cane mills. In every application where “application engineering” is an added value, Dinamic Oil offers innovative and advanced solutions for maximum operative efficiency.



MECHANICAL TRANSMISSION

Planetary Gearboxes
Slewing Drives
Winch Drives
Track Drives
Wheel Drives

WINCHES

Hydraulic Hoisting Winches
Motor Drums
Electric Winches
Hydraulic Pulling Winches


dinamoil

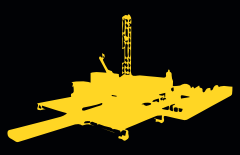




MOBILE APPLICATIONS

ROUGH TERRAIN CRANE

MOBILE CRANE

CONCRETE PUMP

TELEHANDLER

DRILLING MACHINE

TOWER CRANE





ROUGH TERRAIN CRANE

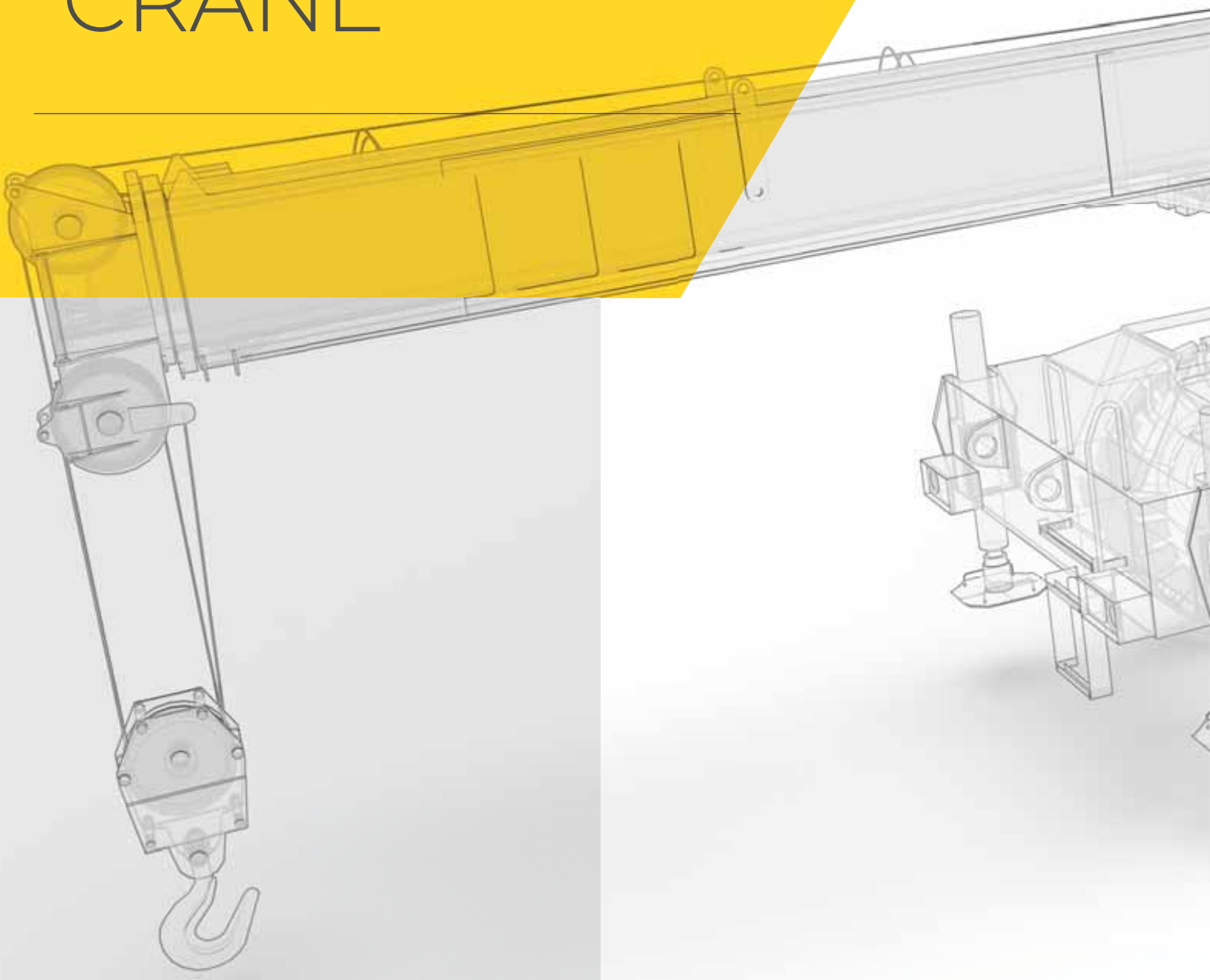

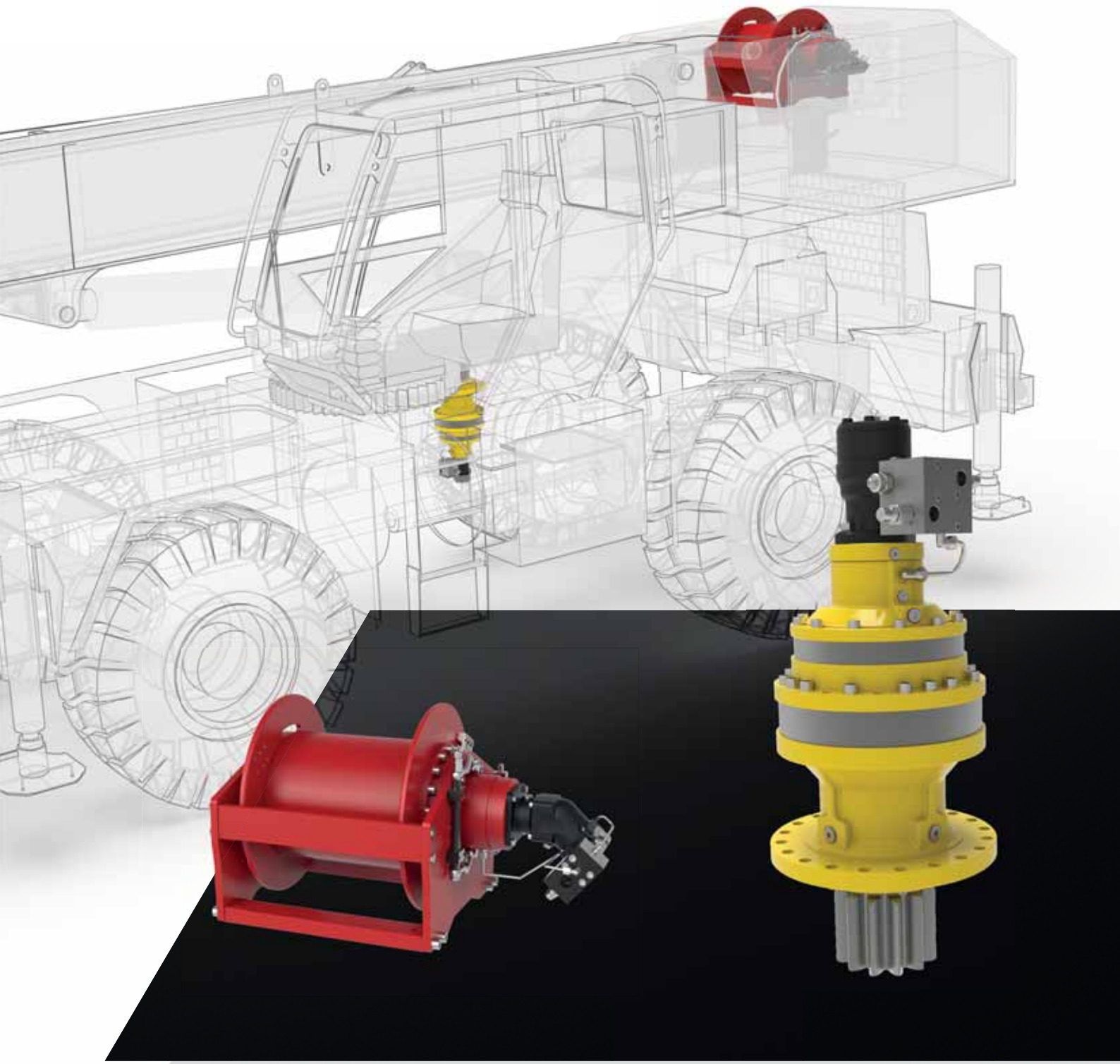

MOBILE CRANE



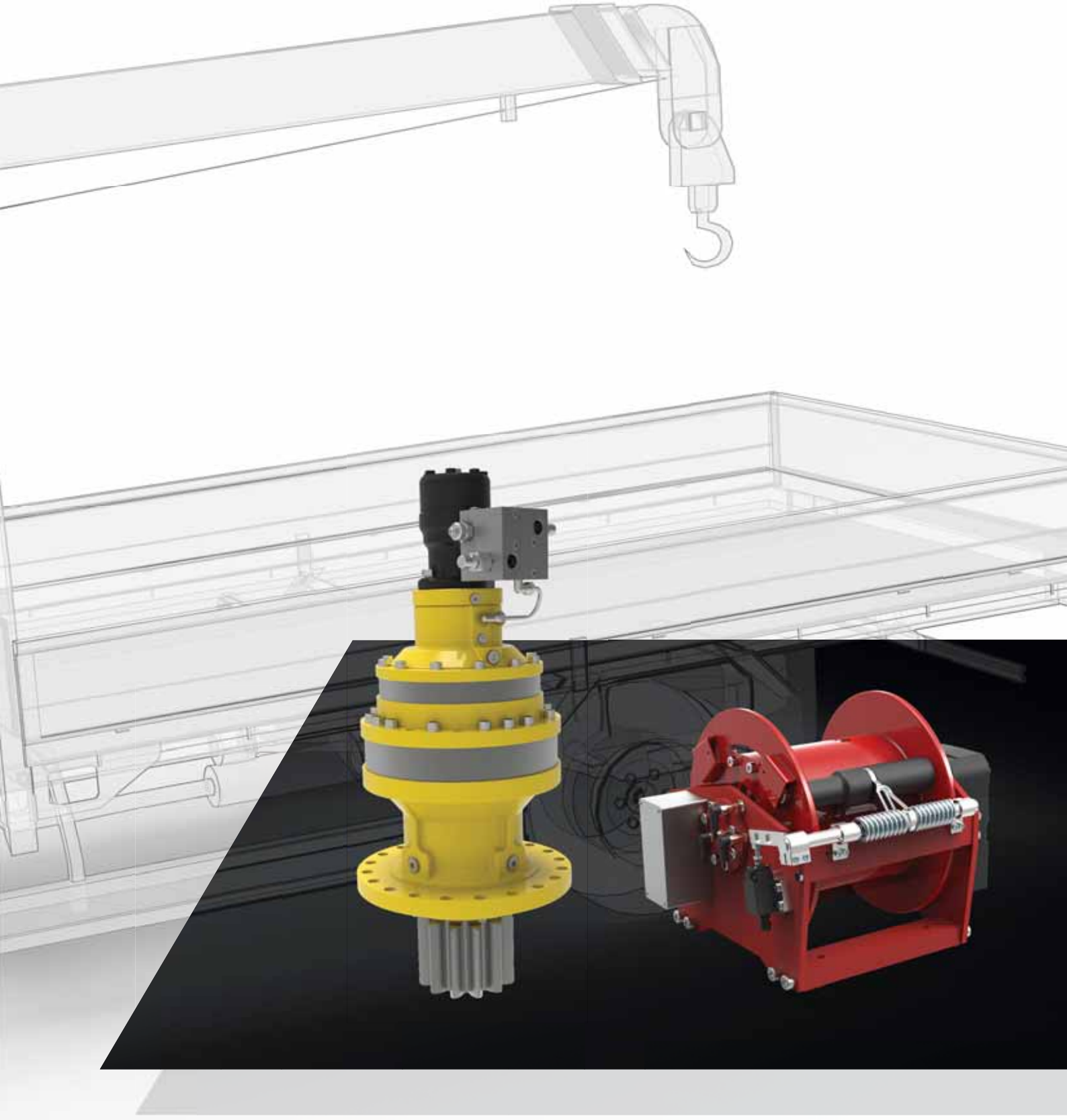

CONCRETE PUMP



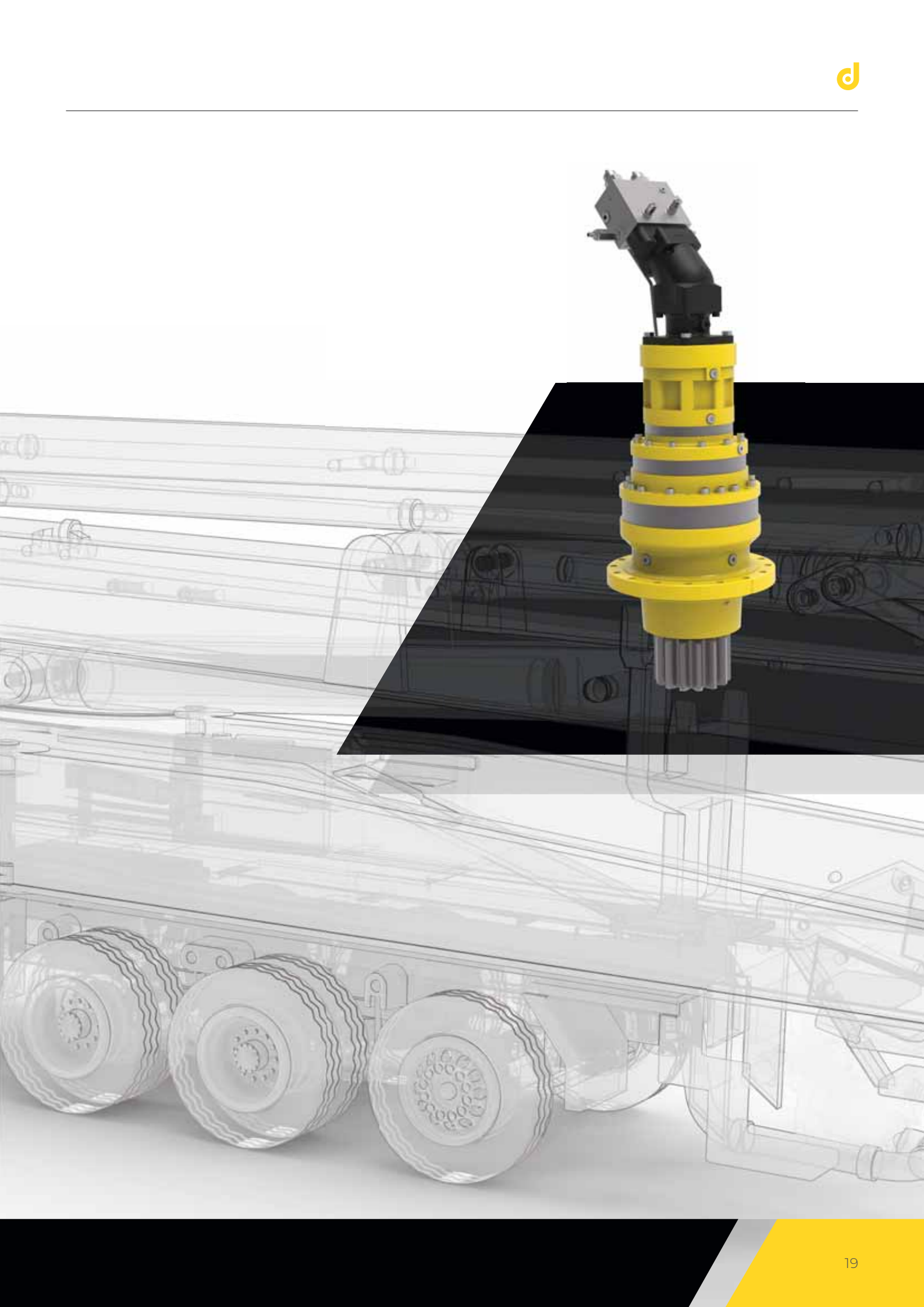

TELE HANDLER



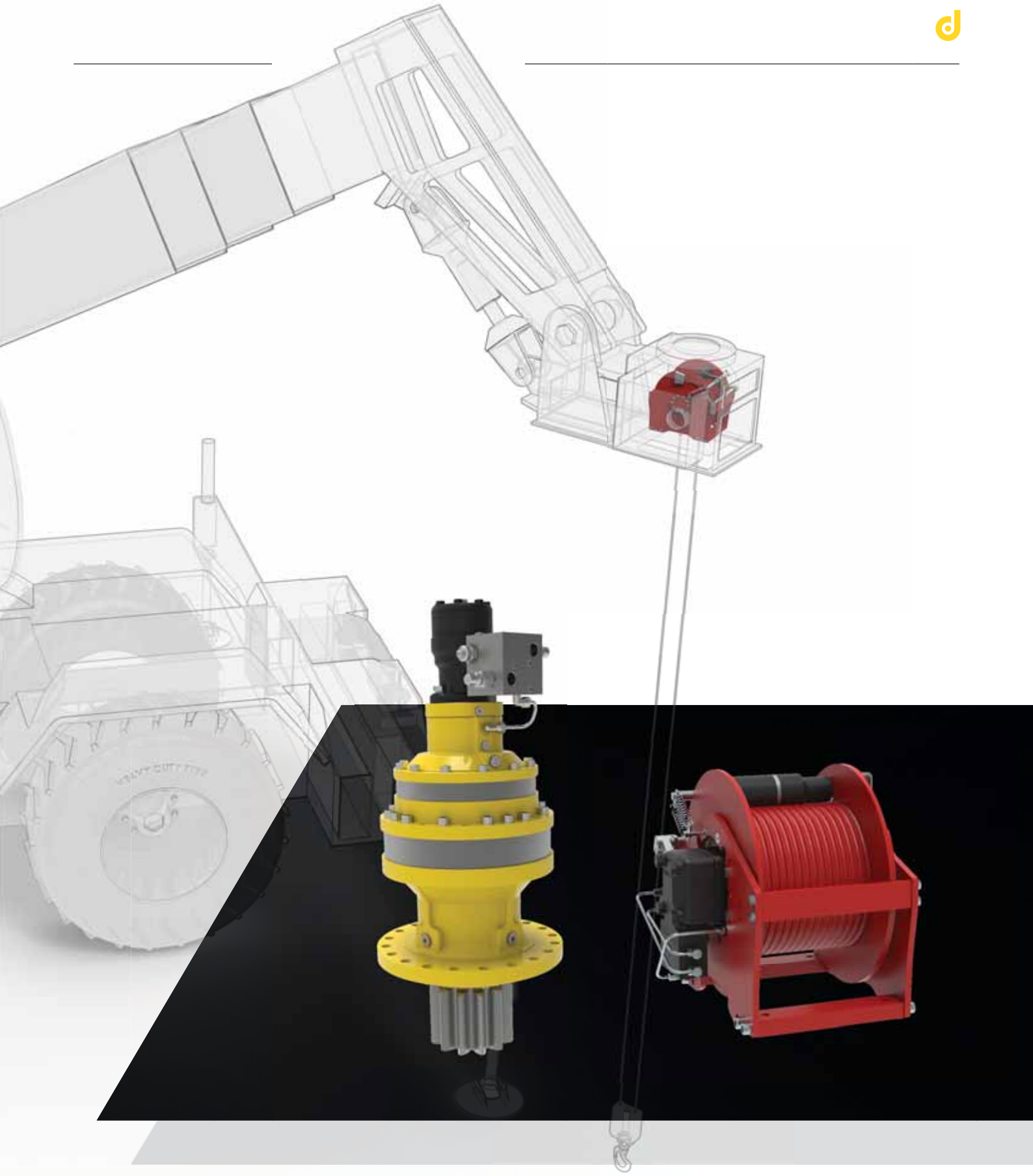

DRILLING MACHINE



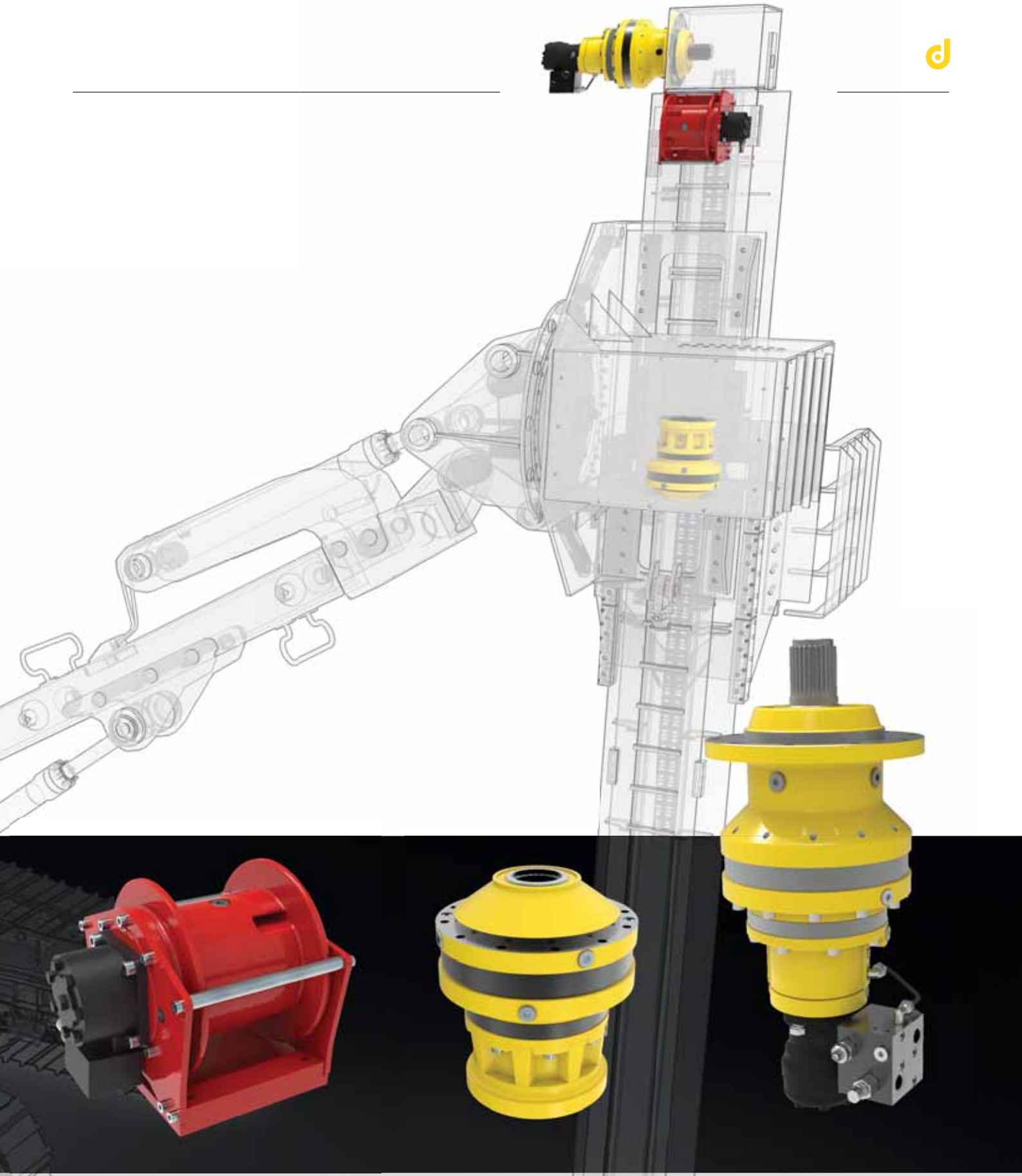

TOWER CRANE

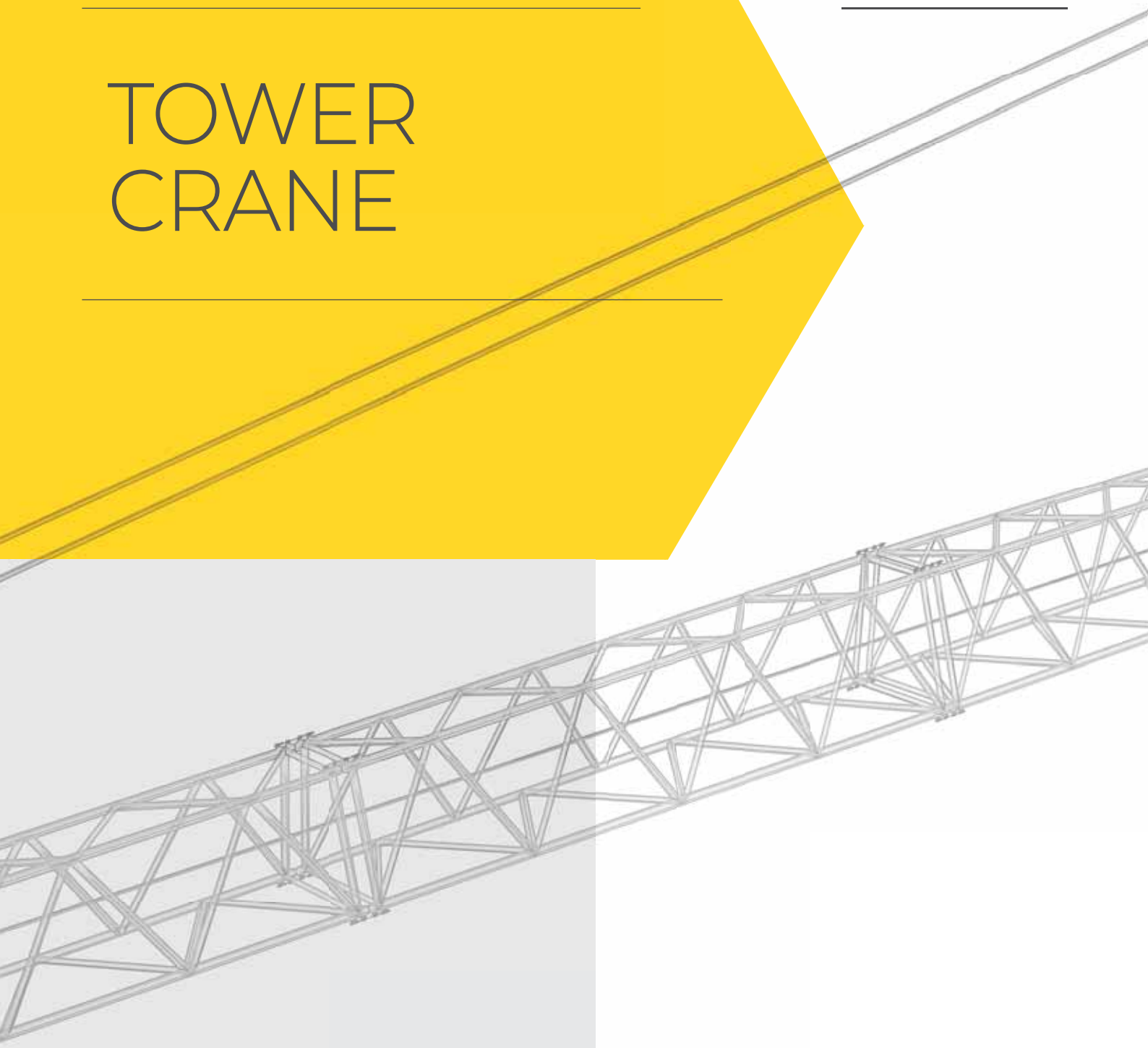

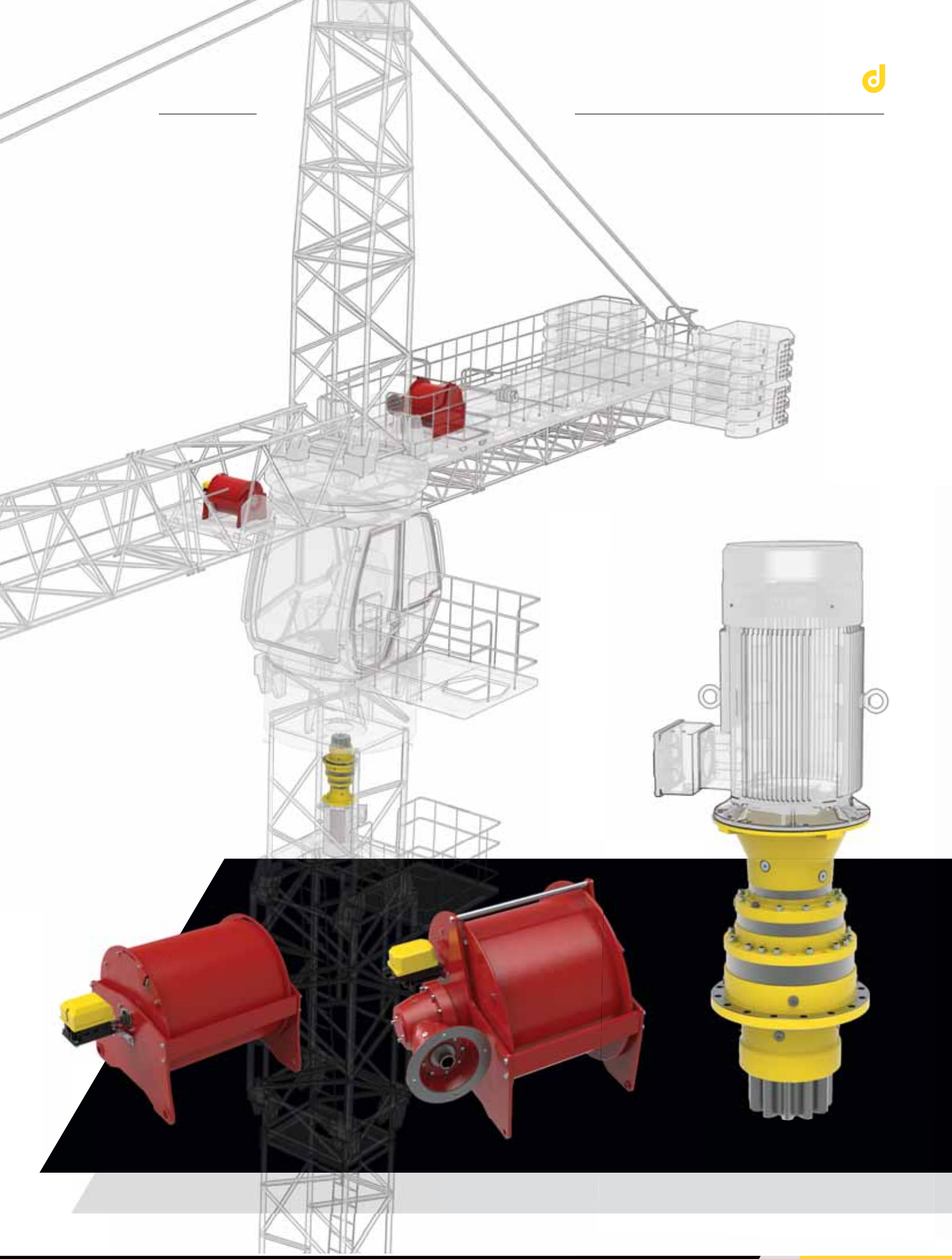



MARINE APPLICATIONS

- AZIMUTH THRUSTER
- FISHING CRANE
- SERVICE CRANE
- DECK CRANE
- BOAT HOIST



AZIMUTH THRUSTER



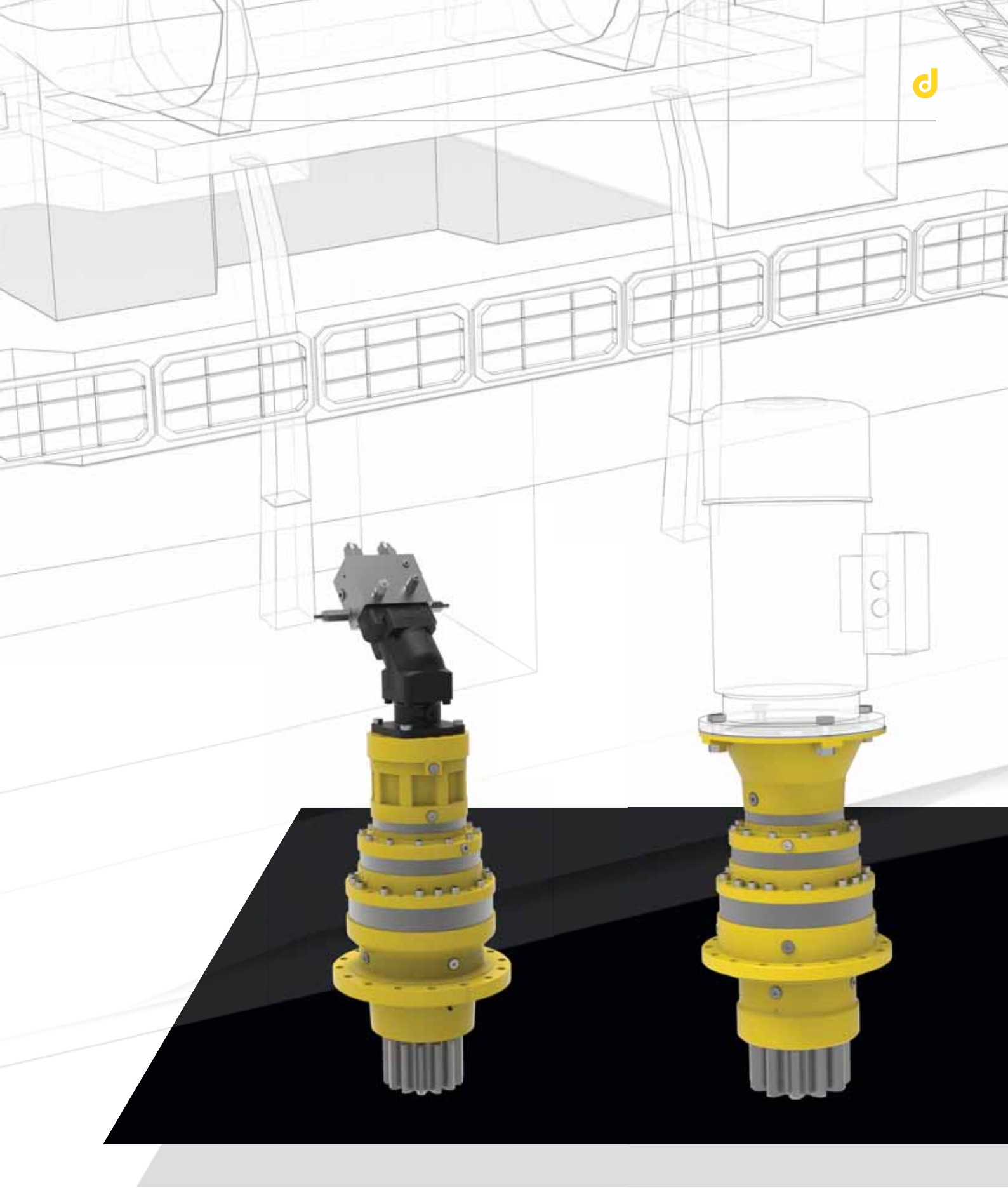

FISHING CRANE



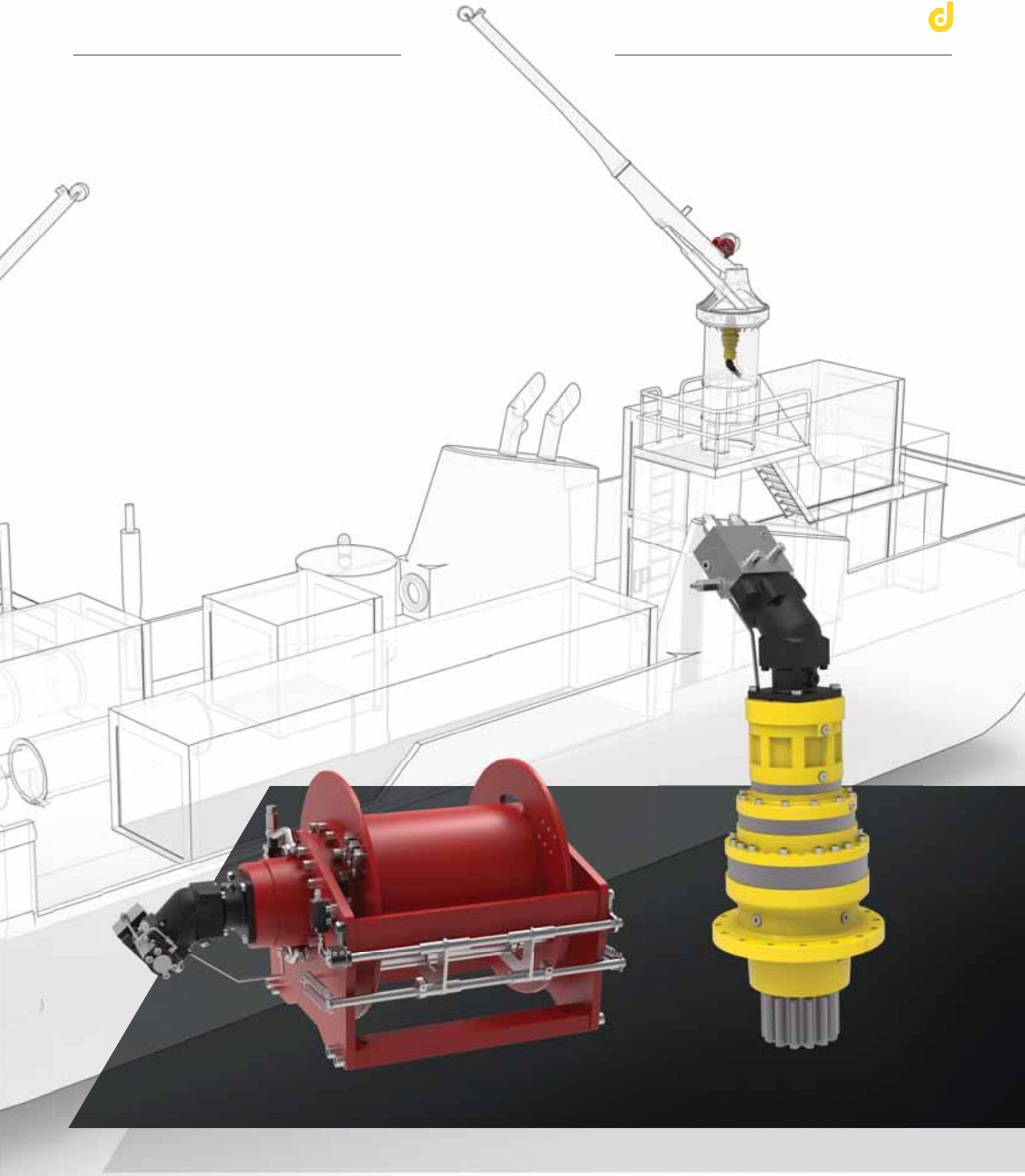

SERVICE CRANE





DECK CRANE

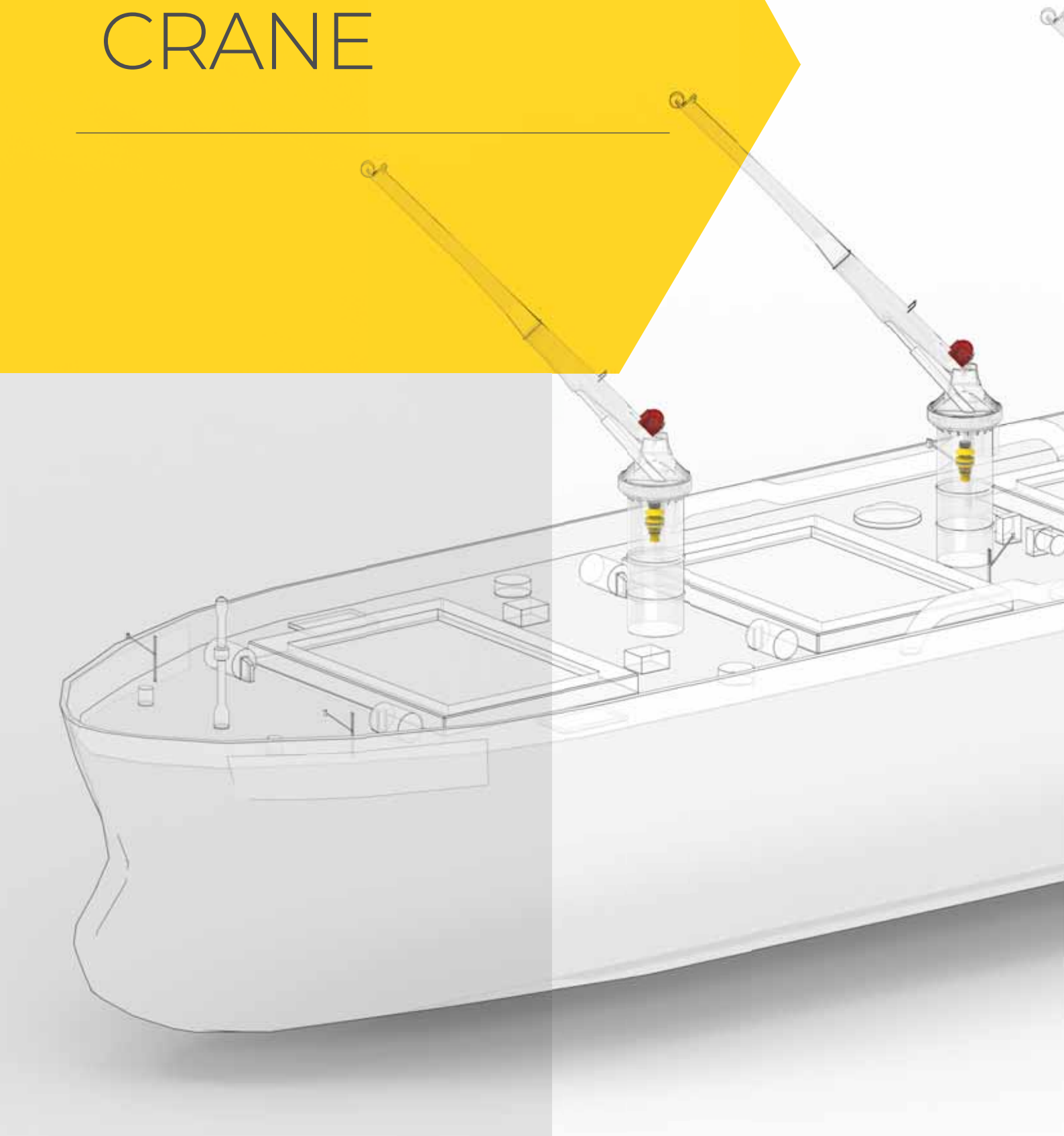

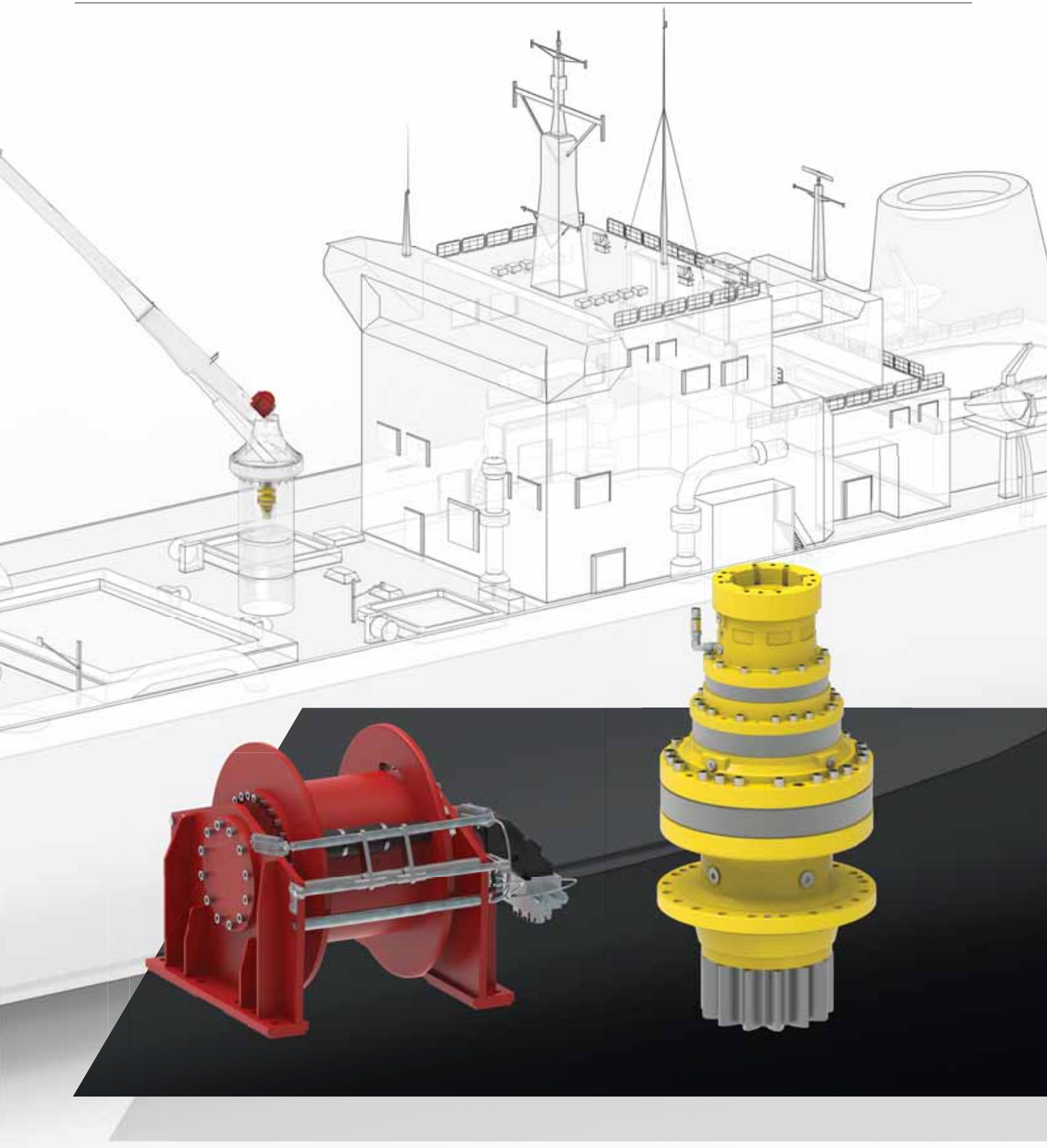

BOAT HOIST



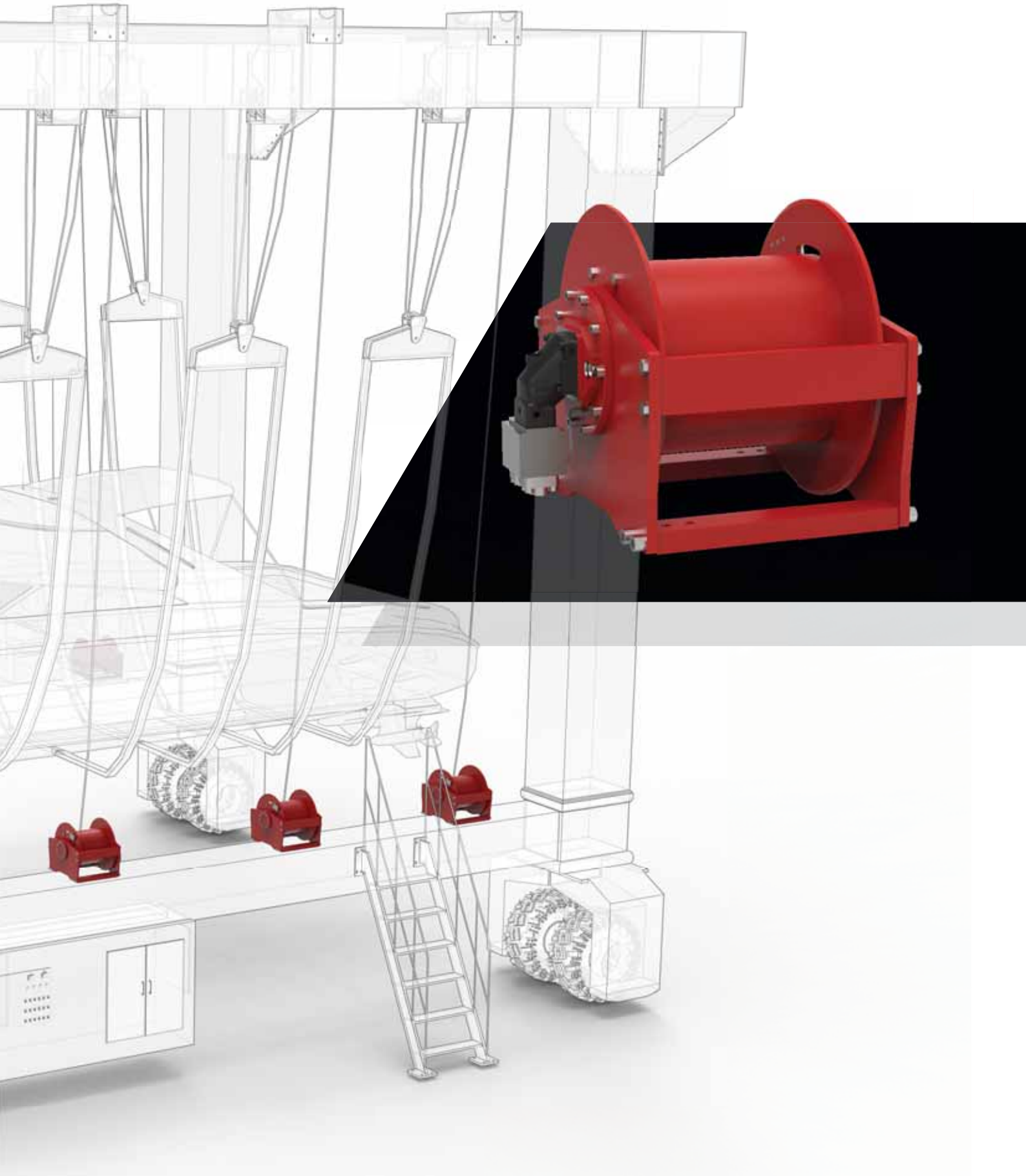

INDUSTRIAL APPLICATIONS

SUGAR PLANT

STEEL PLANT

THICKENERS

SHREDDERS

TUNNEL BORING MACHINE

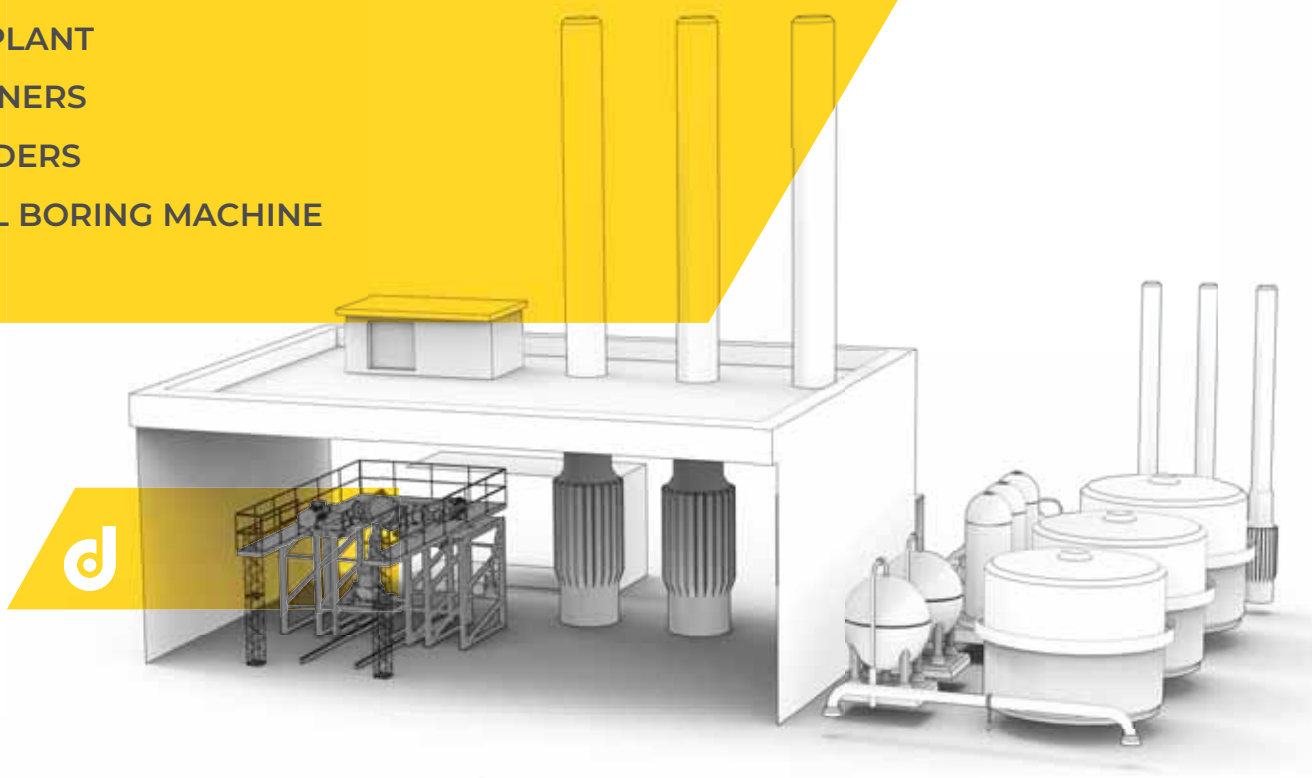

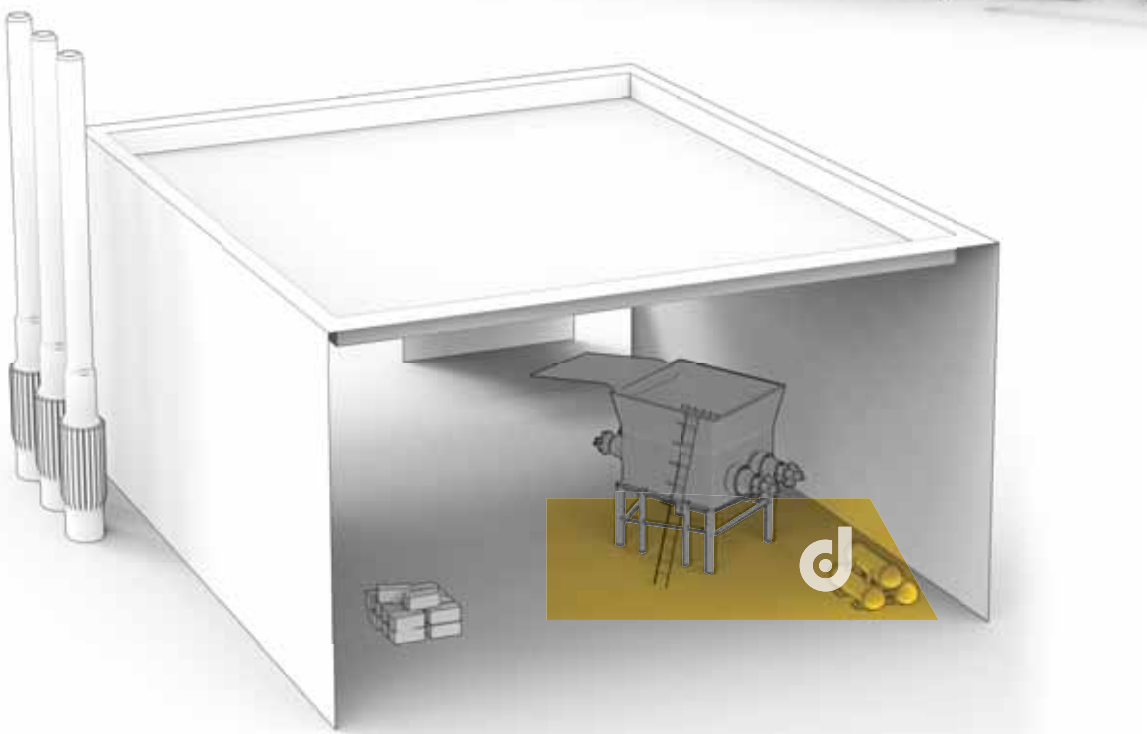

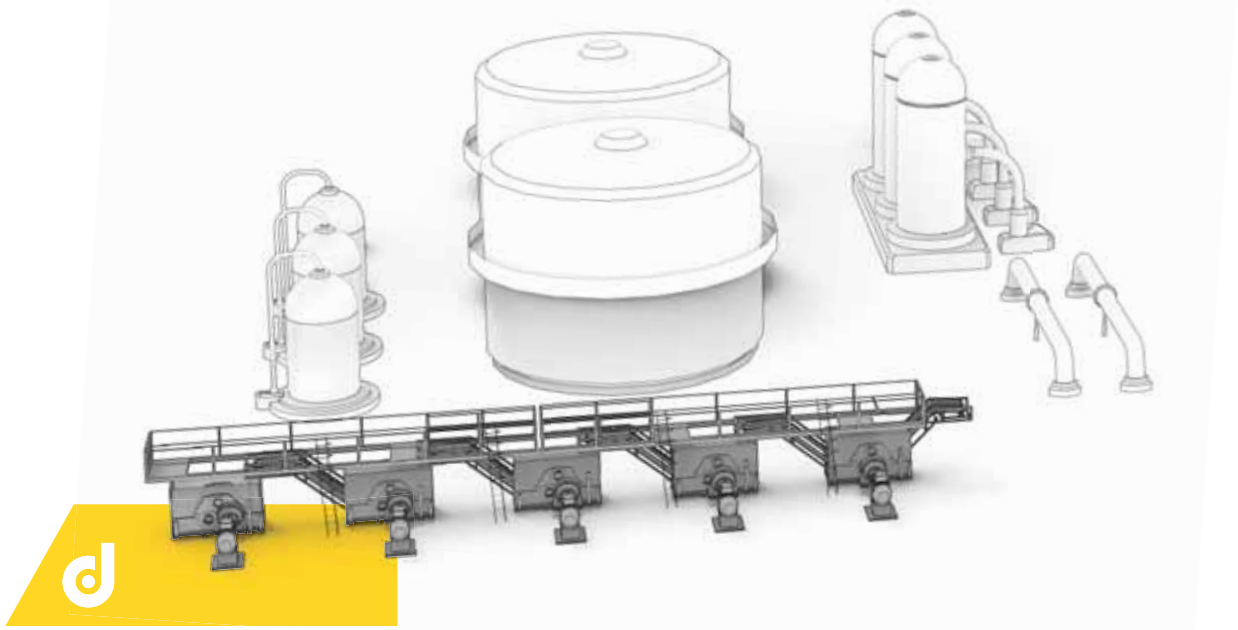

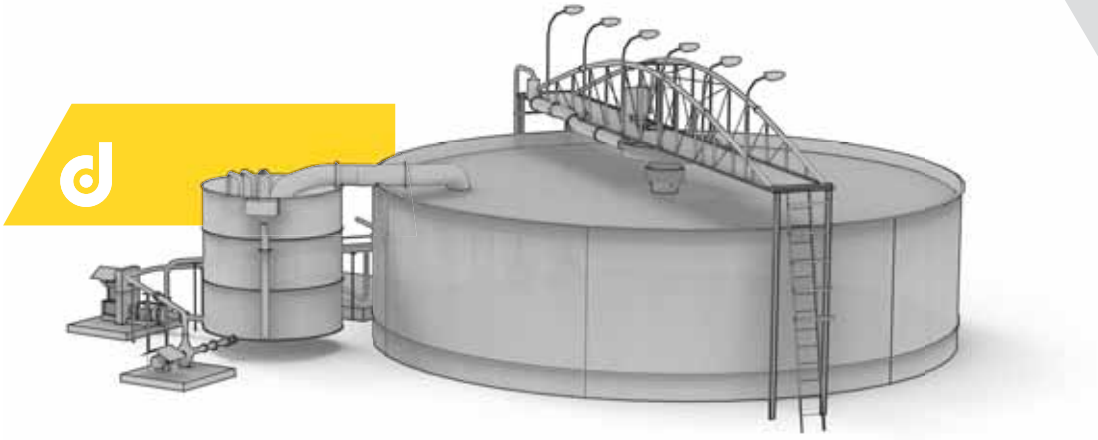

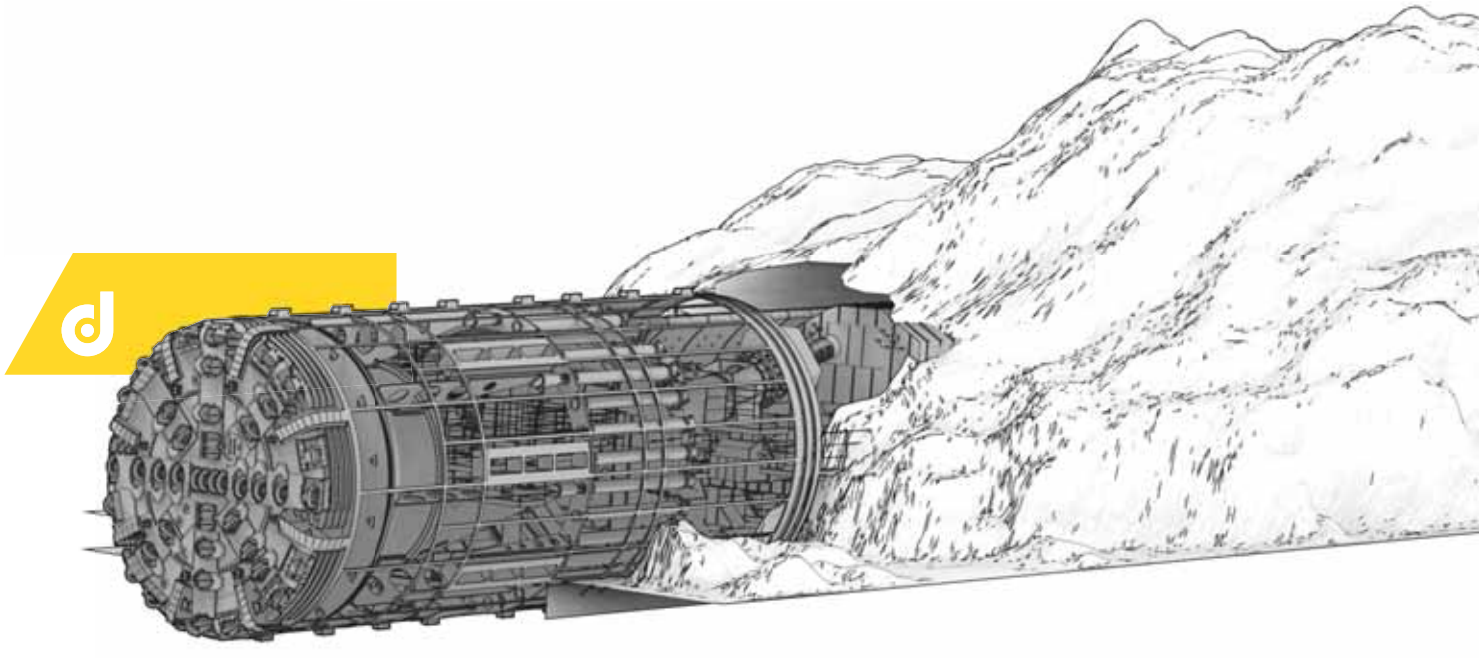

SUGAR PLANT

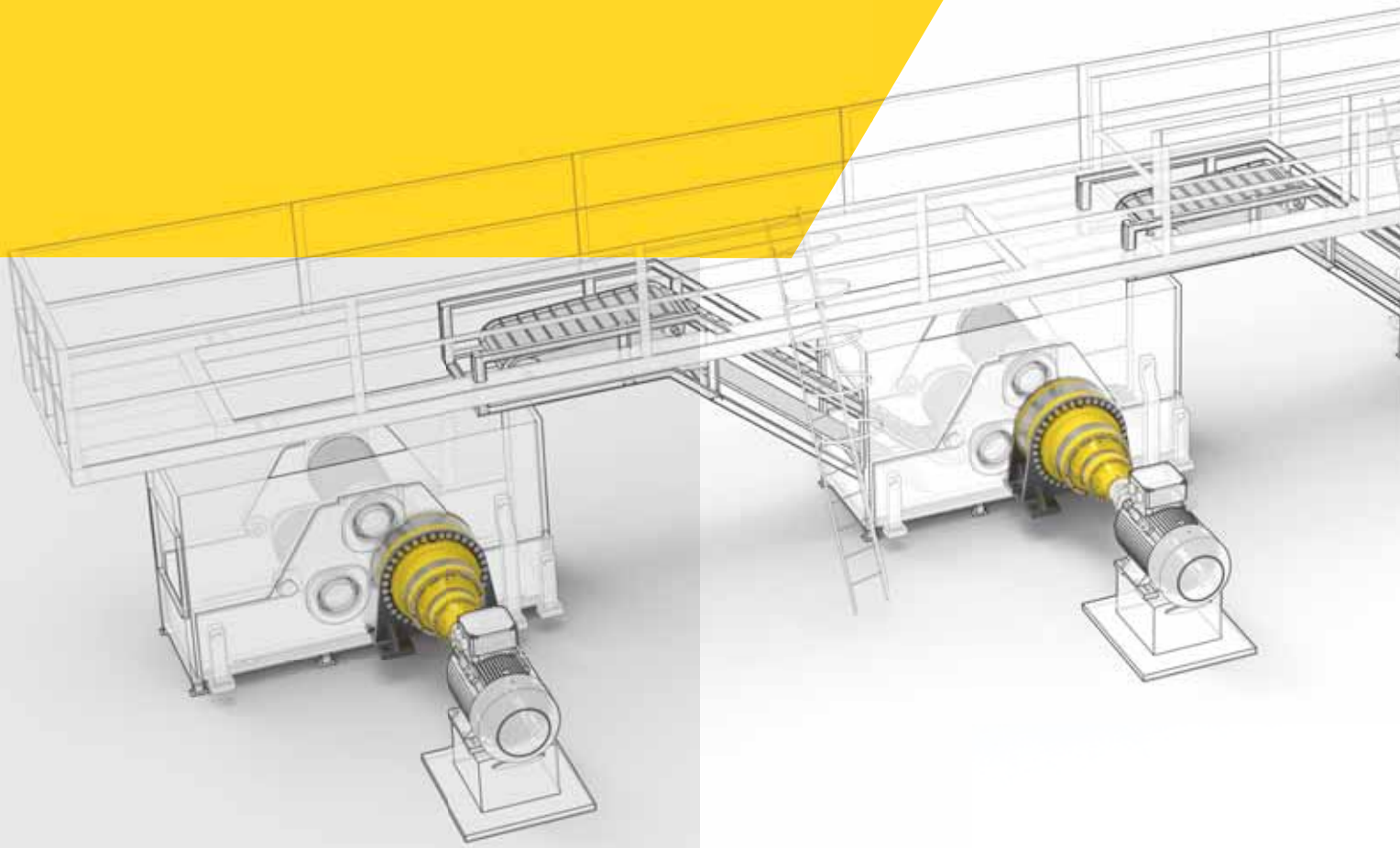

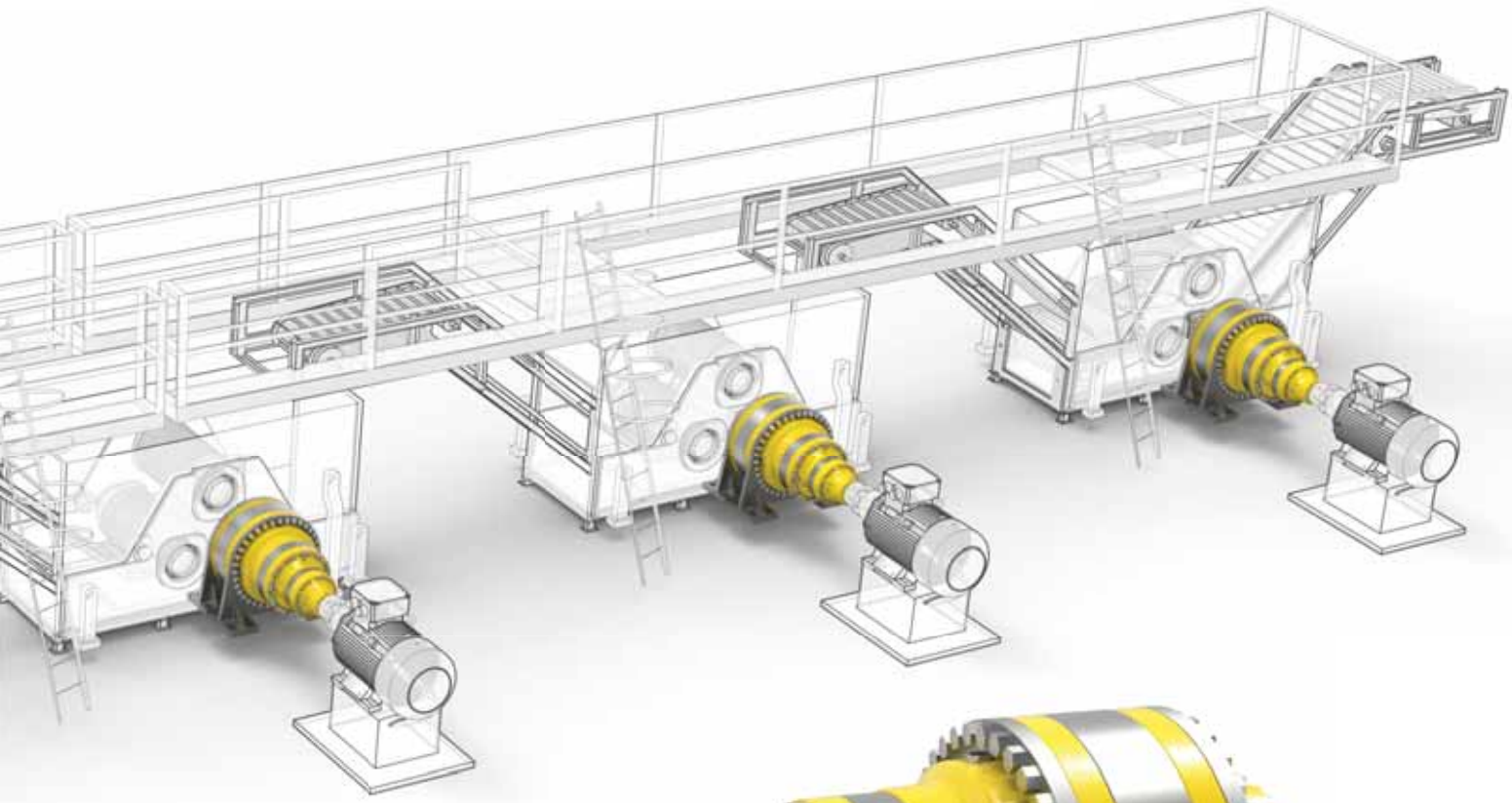

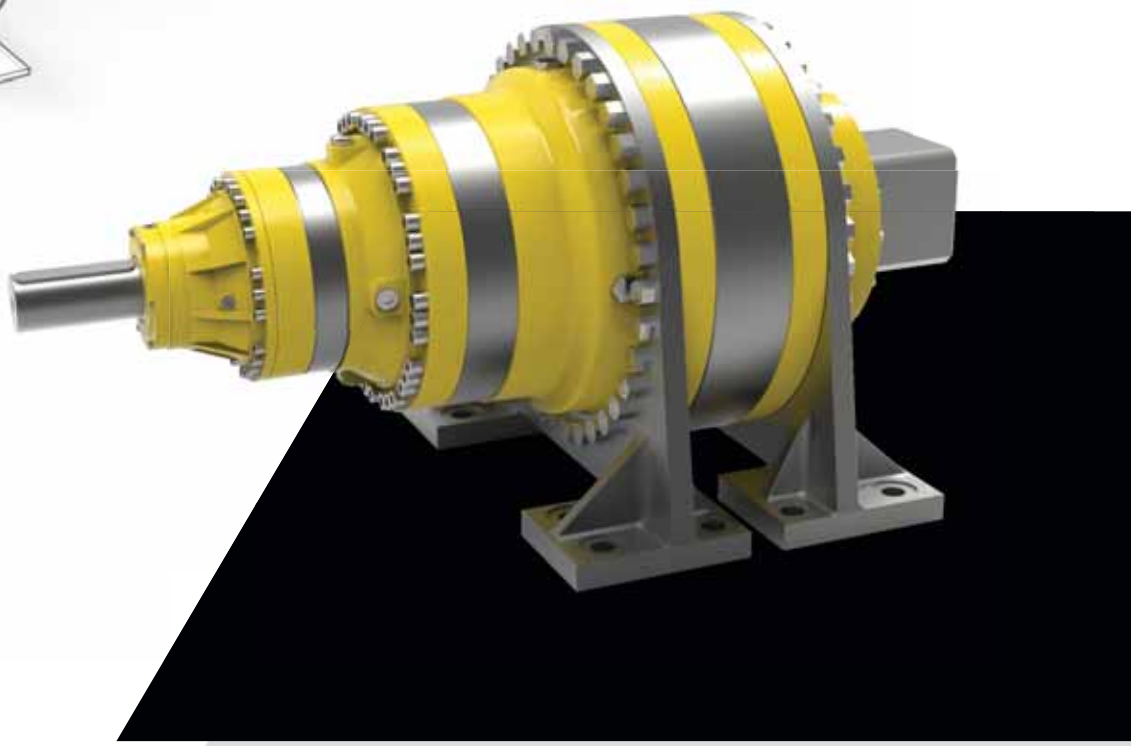

STEEL PLANT



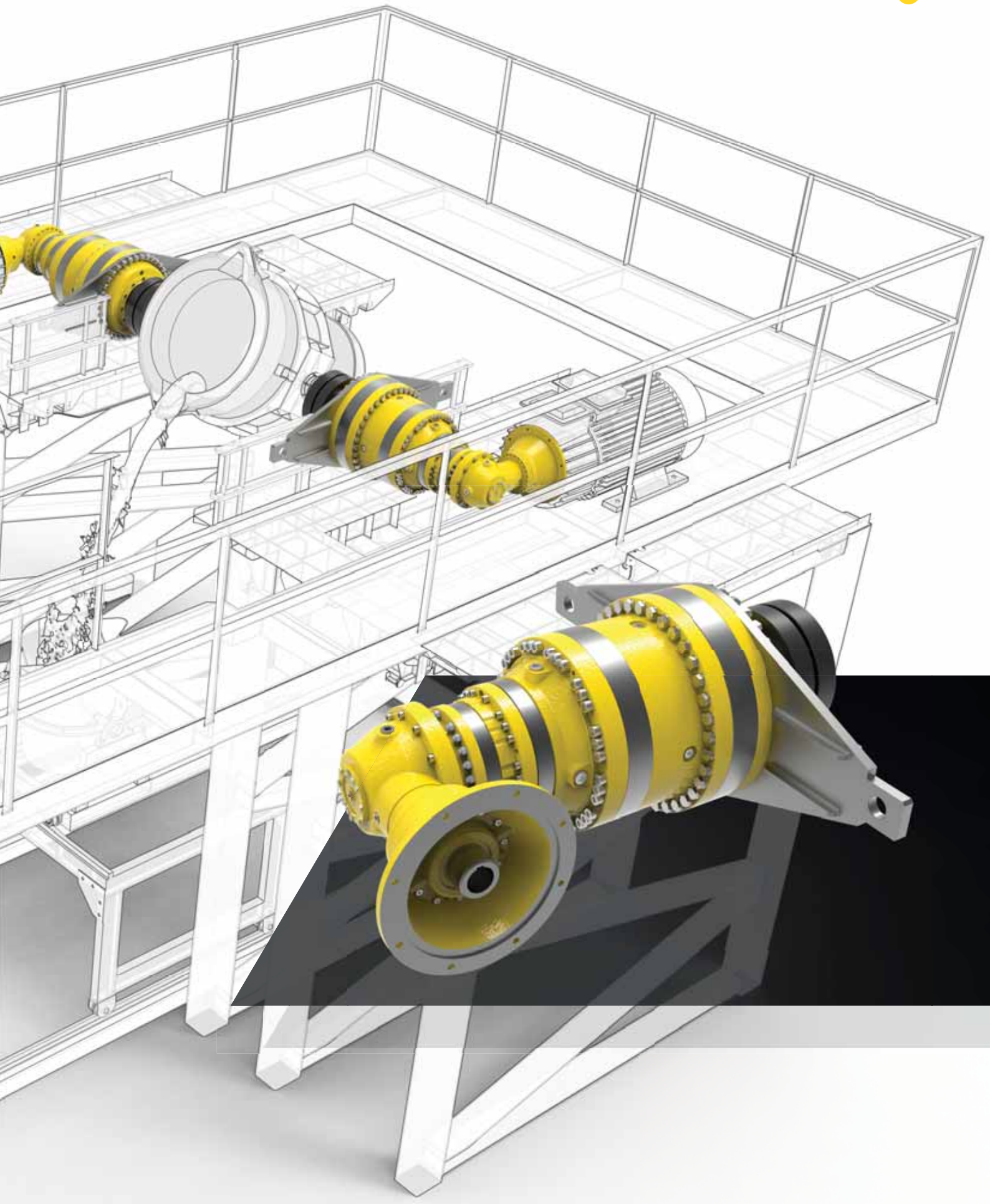

THICKENERS



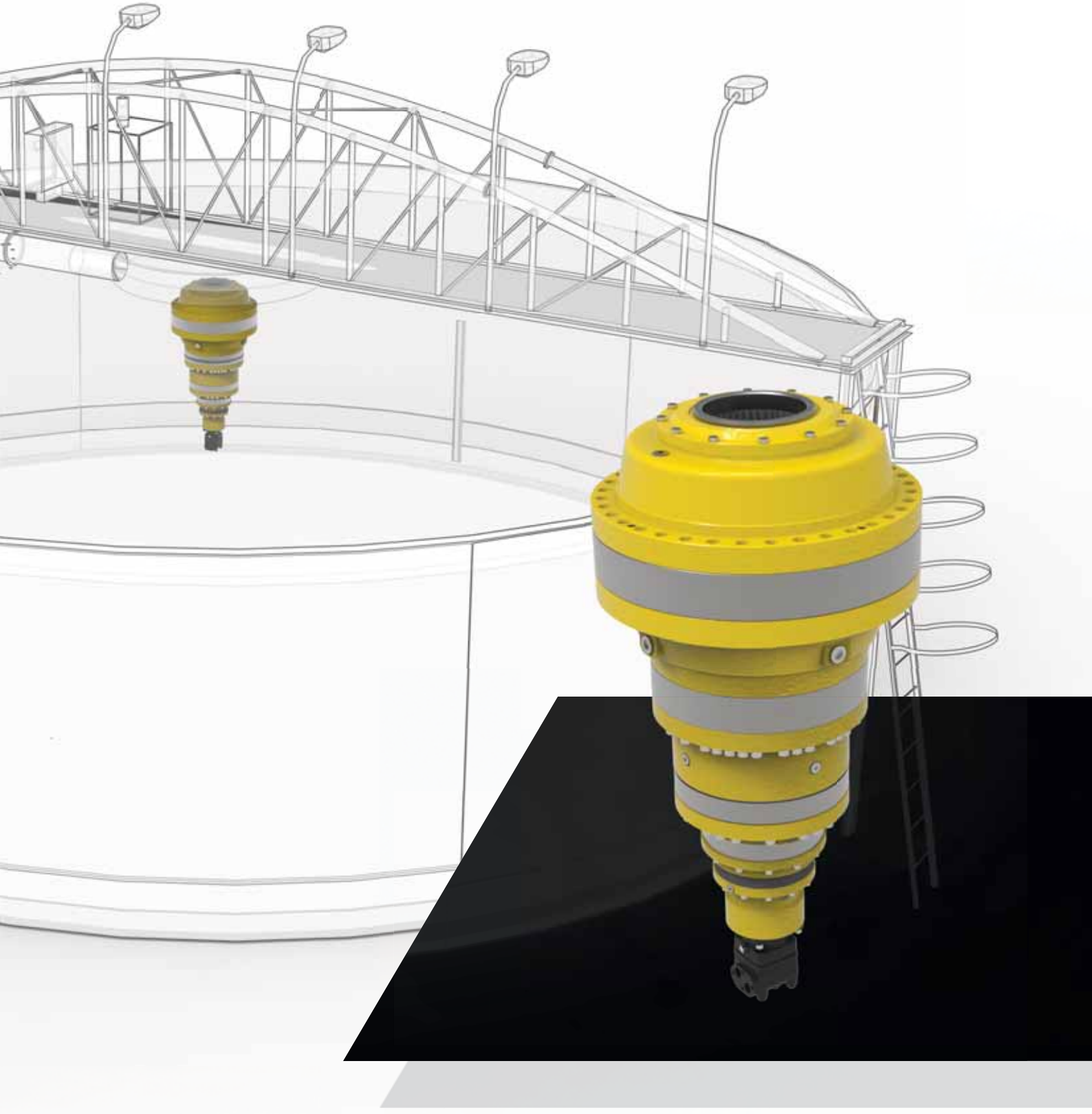

SHREDDERS

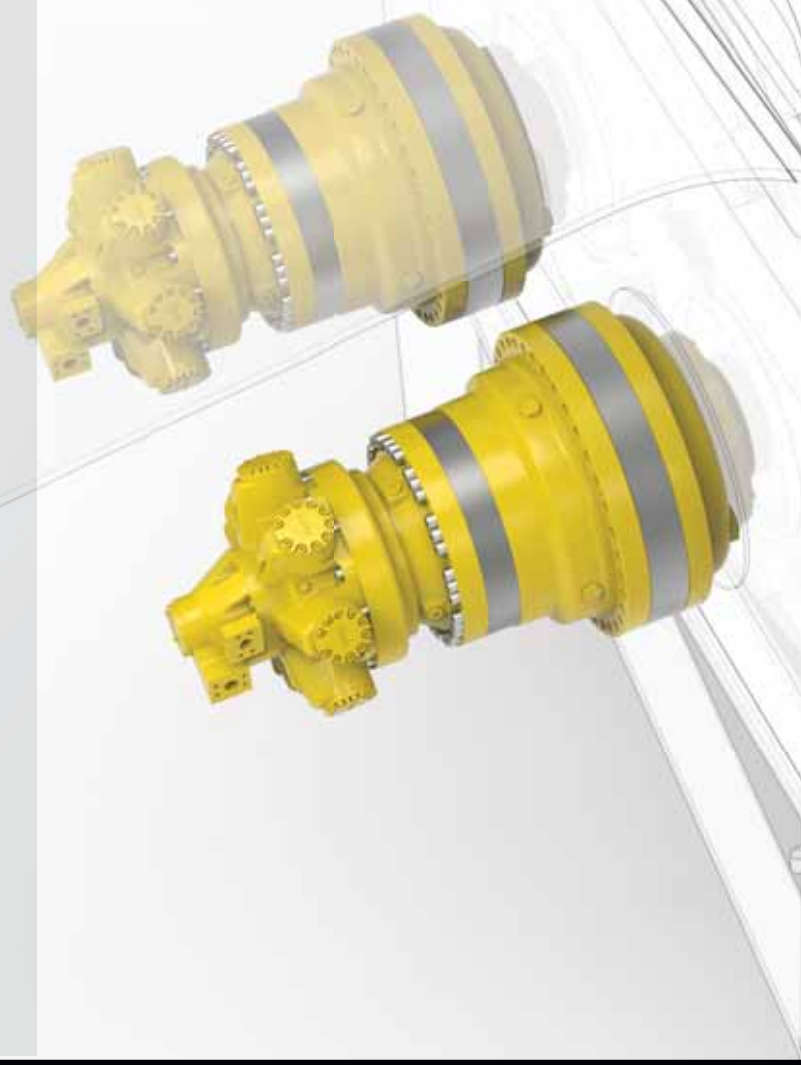



TUNNEL BORING MACHINE

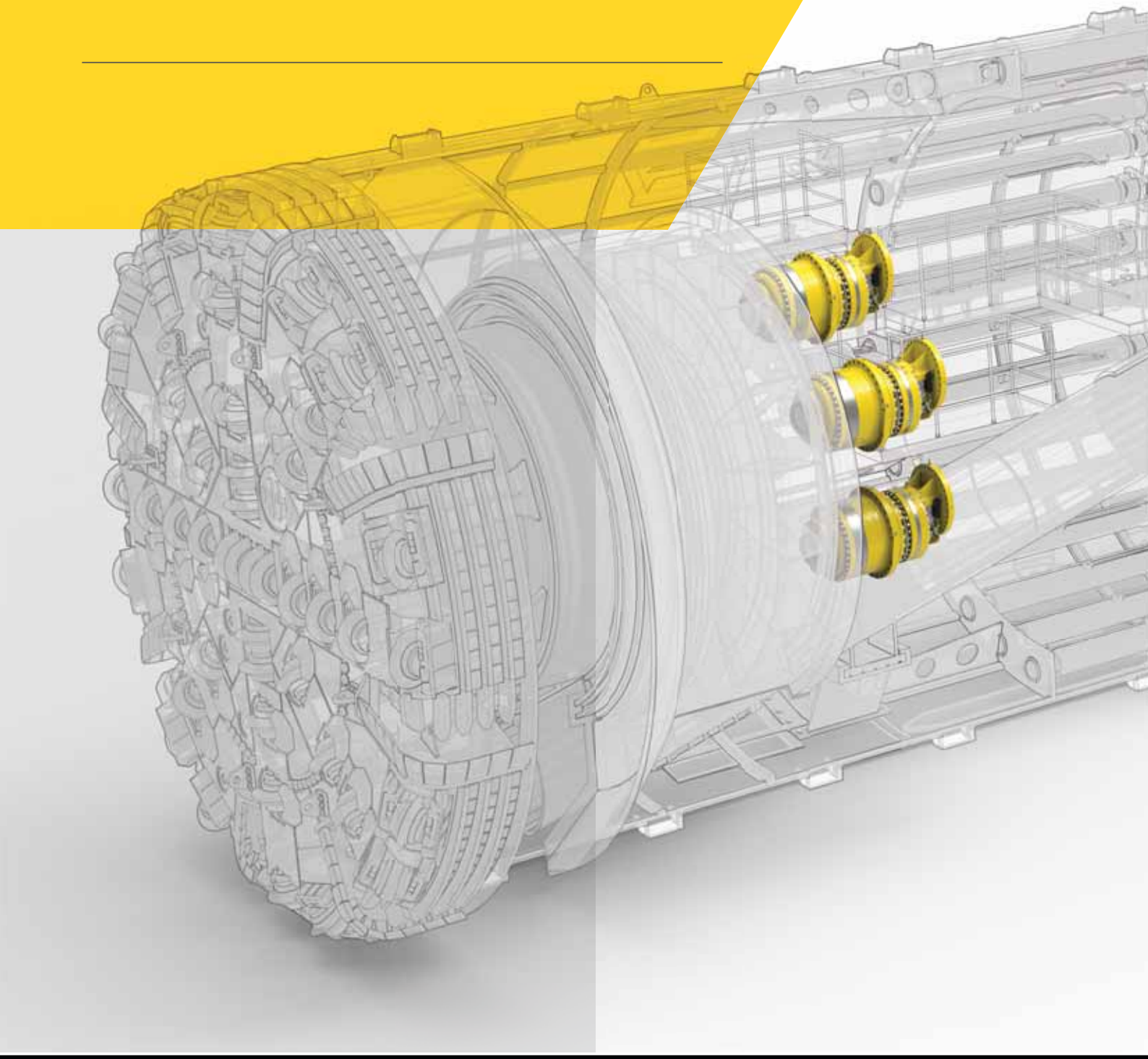

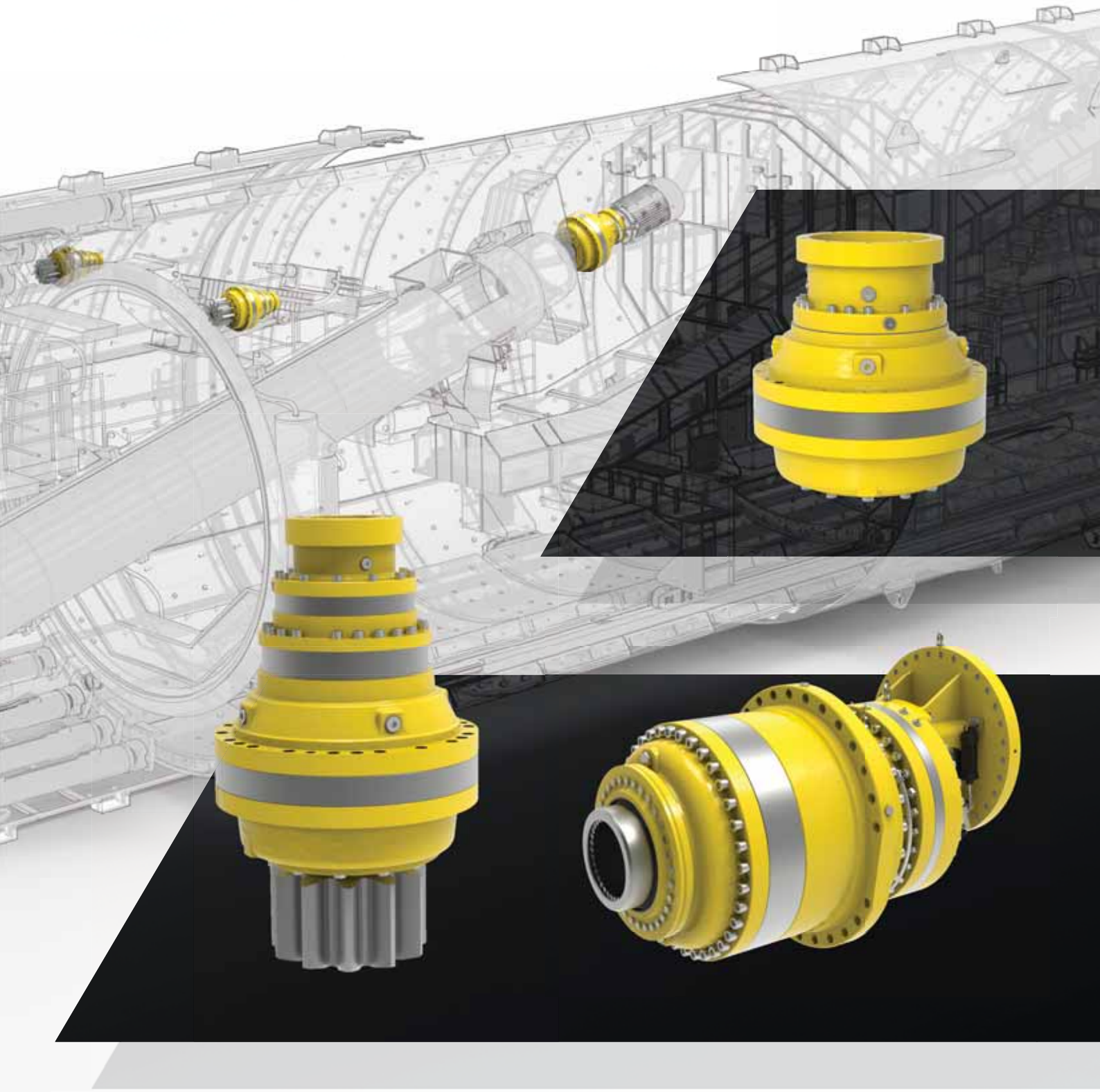

BRANCHES

Dinamic Oil S.p.A.
Bomporto
Modena - Italy
HEADQUARTERS

Dinamic Oil
Triveneto
Rovigo - Italia

Dinamic Oil
North America Inc.
Charlotte - NC - USA

Dinamic Oil
Norway A/S
Frogner - Norway

Dinamic Oil
Deutschland GmbH
Frankfurter - Germany

Dinamic Oil
France
Charvieu Cedex - France

Dinamic Oil
India Pvt. Ltd.
Haryana - India

Dinamic Oil
Asia Pacific Pte.Ltd.
Singapore

Dinamic Oil
Machinery Co., Ltd.
Shanghai - China



All components are manufactured in our plant and company headquarters in Italy.
Our subsidiaries around the globe assemble, test, and customize our products and also provide after-sales service and spare parts delivery.

BRANCHES



DINAMIC OIL INDIA Pvt Ltd.

Dinamic Oil India was established in Delhi in 2008; today it has 27 employees and 3 regional sales offices.
The Company has its own production line of winches (pulling capacity from 1 to 4 tons) and is also able to assemble gearboxes and to provide an after sales service.

DINAMIC OIL FRANCE

Dinamic Oil France is a sales office based in the region of Lyon. Since 2005 it has been providing important technical and commercial support to the French market and to the French speaking customers in Belgium and Switzerland.



DINAMIC OIL NORTH AMERICA Inc.

Dinamic Oil North America Inc, is the US subsidiary of Dinamic Oil SpA, an Italian manufacturer of planetary gearboxes, winches and track drives located in Modena, Italy. Established in 2009 our team has grown exponentially and is now offering a complete range of services from our strategically located office and warehouse in Charlotte, NC. Whether you be interested in after sales service or new product support, contact our organization and we will be happy to assist.

DINAMIC OIL DEUTSCHLAND GmbH

Dinamic Oil Deutschland moved in Frankfurt in 2010. Today it employs 2 people providing German customers with technical and commercial support. Delivery to Germany is from Italy.

BRANCHES

DINAMIC OIL SHANGHAI MACHINERY Co. Ltd.

Dinamic Oil Machinery was established in Shanghai in 2004. Since then it has grown from a small office into a plant of 4000 sqm with 30 employees.

The Company has a wide stock of components, and is able to assemble gearboxes and winches as well as to provide a complete after sales service.



DINAMIC OIL NORWAY A/S

Thanks to a qualified expertise in designing and manufacturing of hoisting solutions, developed through the years by Dinamic Oil Headquarters, the Norwegian subsidiary is, since its establishment in February 2013, a well-appreciated partner in the Northern European market for marine, fishing and offshore applications. Dinamic Oil Norway is therefore a young and strongly focused company that can rely also on a successful combination of high experience and skills of the local team. All departments (administration, sales, after sales, assembly, service and testing) are based in Frogner, strategic location between the city of Oslo and its main airport Oslo Gardermoen.



DINAMIC OIL TRIVENETO

Dinamic Oil Triveneto is a sales office based in Rovigo, where skilled and qualified personnel is able to provide customers with real-time technical and commercial support.

DINAMIC OIL ASIA PACIFIC PTE. Ltd.

Dinamic Oil Asia Pacific Pte Ltd was established in Singapore on 14 February 2011 with the aim of expanding the sales, marketing and services of Dinamic Oil planetary gearboxes and winches to regional markets in Singapore, Malaysia, Indonesia, Thailand, the Philippines, Vietnam and Taiwan.

In just a few years, we have achieved significant market shares in Palm Oil Mill industries, Marine & Fishing Industries, Industrial & Sugar Industries.

dinamic oil

Dinamic Oil reserves the right to implement modifications without notice. This catalogue cannot be reproduced, even partially, without prior concert.

All rights reserved© - September 2022

Coordination
Marketing Department Dinamic Oil
3D illustrations
Procedi - San Lazzaro di Savena (BO)
Photos
Alfredo Martinelli
Graphic & Design
abc&z - Bologna
Print
Modulo Sei - Camposanto (MO)

dinamic oil

dinamicoil.com

Dinamic Oil S.p.A.
Via Togliatti,15
41030 Bomporto - MO - Italy
T: +39 059 812611
F: +39 059 812603
E: info@dinamicoil.it
dinamicoil.com

Dinamic Oil Deutschland GmbH
Frankfurter Straße 151 b
D - 63303 Dreieich-Sprendlingen
T: +49 (0) 6103 2024593
F: +49 (0) 6103 8077239
E: verkauf@dinamicoil.de
dinamicoil.com/deutschland

Dinamic Oil (Shanghai)
Machinery Co., Ltd.
Building 2, No128 Lane 168 Dieqiao Rd.
Kangqiao Industry Park Pudong
201319 Shanghai – China
T: 0086 21 6818 7100
F: 0086 21 6818 7107
E: info@dinamicoil.com.cn
dinamicoil.com/china

Dinamic Oil India Pvt. Ltd.
Plot no.5 - Sector-16, HSIIDC
124507 Bahadurgarh Haryana
New Delhi - India
T: +91 8800211855
E: india@dinamicoil.com
dinamicoil.com/india

Dinamic Oil Triveneto
Via Enrico Toti, 48
40500 Rovigo - Italy
T: +39 340 7745 664
F: +39 059 812603
E: a.coltro@dinamicoil.it
dinamicoil.com/triveneto

Dinamic Oil Norway A/S
Lindebergveien, 3
2016 Frogner - Norway
T: +47 63 82 50 40
F: +47 63 82 50 41
E: DinamicOil.Norway@dinamicoil.com
dinamicoil.com/norway

戴纳密克（上海）机械有限公司
中国上海浦东康桥工业园区
叠桥路168弄128号2栋1楼
邮编: 201319
电话: 0086 21 6818 7100
传真: 0086 21 6818 7107
邮件: info@dinamicoil.com.cn
dinamicoil.com/china

Dinamic Oil France
ZI Montbertrand BP 3612
38236 Charvieu Cedex - France
T: +33 (0) 472 462 318
F: +33 (0) 472 462 327
E: dinamicoil@orange.fr
dinamicoil.com/france

Dinamic Oil North America Inc.
4725 Entrance Drive - Suite A
Charlotte - NC - 28273 - USA
T: +1 704 587 4600
F: +1 980 939 6297
E: info.usa@dinamicoil.com
dinamicoil.com/northamerica

Dinamic Oil Asia Pacifi c Pte. Ltd.
47L Tuas South Avenue,1
637249 - Singapore
T: +65 6791 0802
F: +65 6791 2661
E: sales@dinamicoilap.com.sg
dinamicoil.com/asia

CP22/A